TECHNICAL DATA SHEET

PRO-SERIES GROUND SCREW Ø76 x 2000mm

Art. no:	31044
Weight:	15,00 kg
Dimensions:	Pipe: 76,1 x 3,6 x 2000 mm Flange: 8,0 x 200 mm
Materials:	Steel Type Pipe: S235 Steel Type Flange: S355 Surface treatment: Galvanized according to DIN EN ISO 1461
Installation:	Electric Ground Screw Driving Machine *(Art.No: 12001)* Pneumatic Ground Screw Driving Machine *(Art.No: 12005)* Hydraulic Ground Screw Driving Machine *(Art.No: 12090)*
Use:	Light construction e.g. porches, garden rooms and modular homes.
Fixation:	M16 / M12 / M10 Bolts

Side view

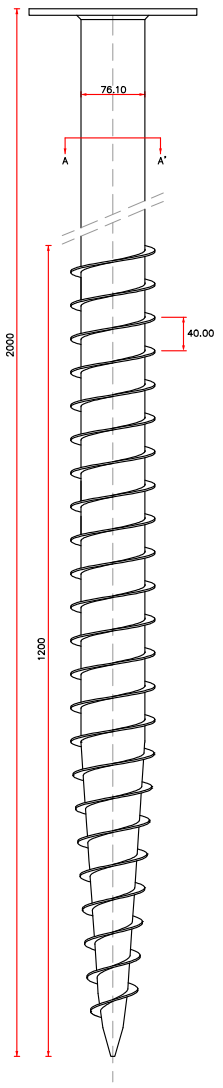

Cross cut

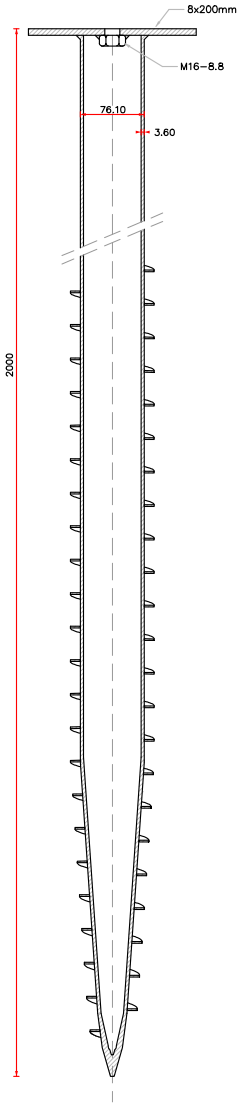

Top view flange

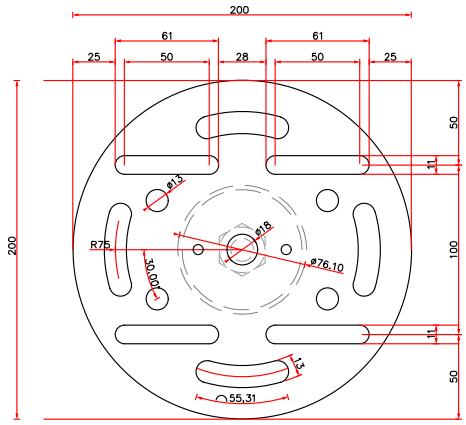

Cross cut pipe (A–A')

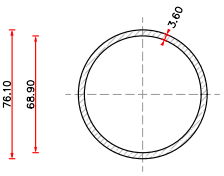

Drawing description	PRO-SERIES GROUND SCREW Ø76 x 2000mm	
Date	**Signed**	**Sheet number**
12/2018	DVDE	4 of 4
Drawing number	**Format**	**Document status**
31044-V1	A4	DEF.

FIRST BASE GROUND SCREWS
Patersweg 2, 5406 XJ
Uden, Holland.

info@firstbasegroundscrews.com
www.firstbasegroundscrews.com
0031 413 432 052

Products to combine:

17021 – POLEHOLDER M20
17022 – L-BRACKET M16 80mm
17023 – L-BRACKET M16 160mm

Click here for the FIRST BASE Load Capacity Chart